Programming ATtinys

Paul MacDougal

7/8/13

ATtiny85

- Low Power AVR® 8-Bit Microcontroller
- Small package (8-pin)
- Inexpensive (less than a dollar)
- Arduino sketch compatible (mostly)

ATtiny 85 Pinout (simplified)

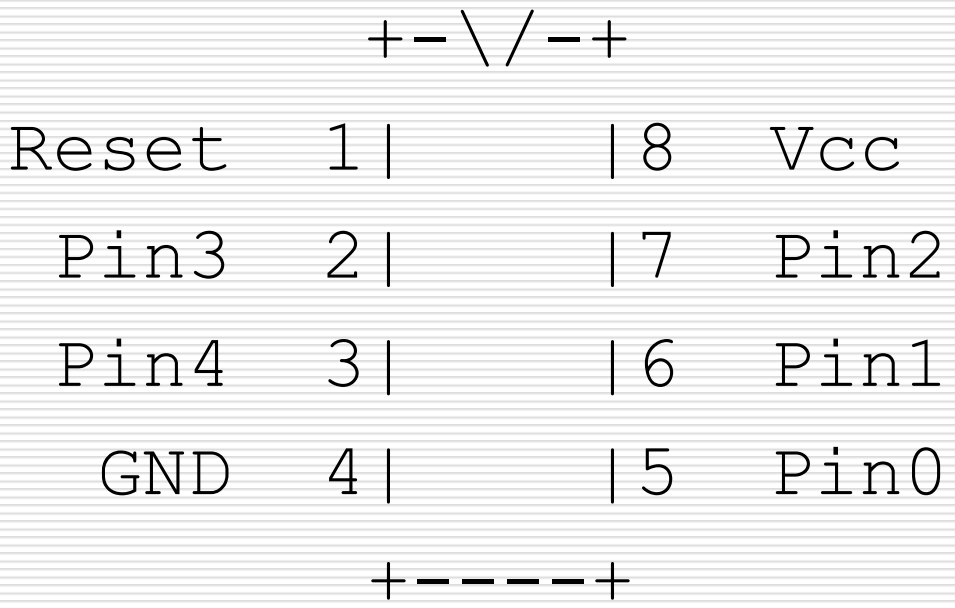

Comparison to ATmega328

Feature	ATmega328	ATtiny85	ATtiny84
Flash	32KB	8KB	8KB
SRAM	2048B	512B	512B
EEPROM	1024B	512B	512B
Pkg pins	28	8	14
Cost*	$1.608	$0.72	$0.768
I/O pins	20 (or 23)	5 (or 6)	11 (or 12)
Analog	6	3 (or 4)	8

* DIP package in qty 100 from Digikey

AVR Programming Methods

- Bootloader
  - Arduino programming w/ IDE via USB
- High voltage serial program (HVSP)
  - The way to reprogram RESET fuse
- HVPP, JTAG, PDI, TPI, …
- ISP (In System Programming)
  - The topic of this talk
  - Uses SPI pins (SCLK, MISO, MOSI)

AVR Programming Methods (cont.)

- In System Programming (ISP)
  - Sparkfun has a programmer for $48
  - Works with AVR Studio
  - Connects to ICSP header
    - In Circuit Serial Programming

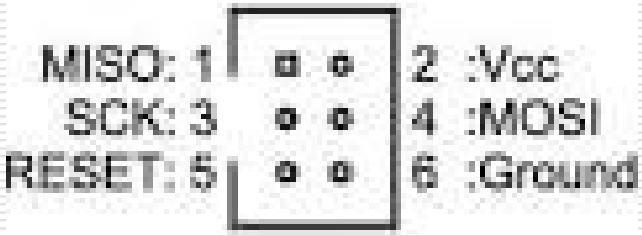

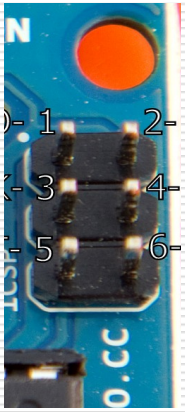

AVR Programming Methods (cont.)

- We want to program bare chips, so we don't have an ICSP header
  - ArduinoISP
    - Arduino board acts as the programmer
    - ArduinoISP sketch
    - Wire up connections to bare chip
  - Sparkfun Tiny ISP Programmer ($20)
    - ATtiny84 handles USB
    - 8 pin socket for ATtiny85
  - Chipper, Little Wire, and others

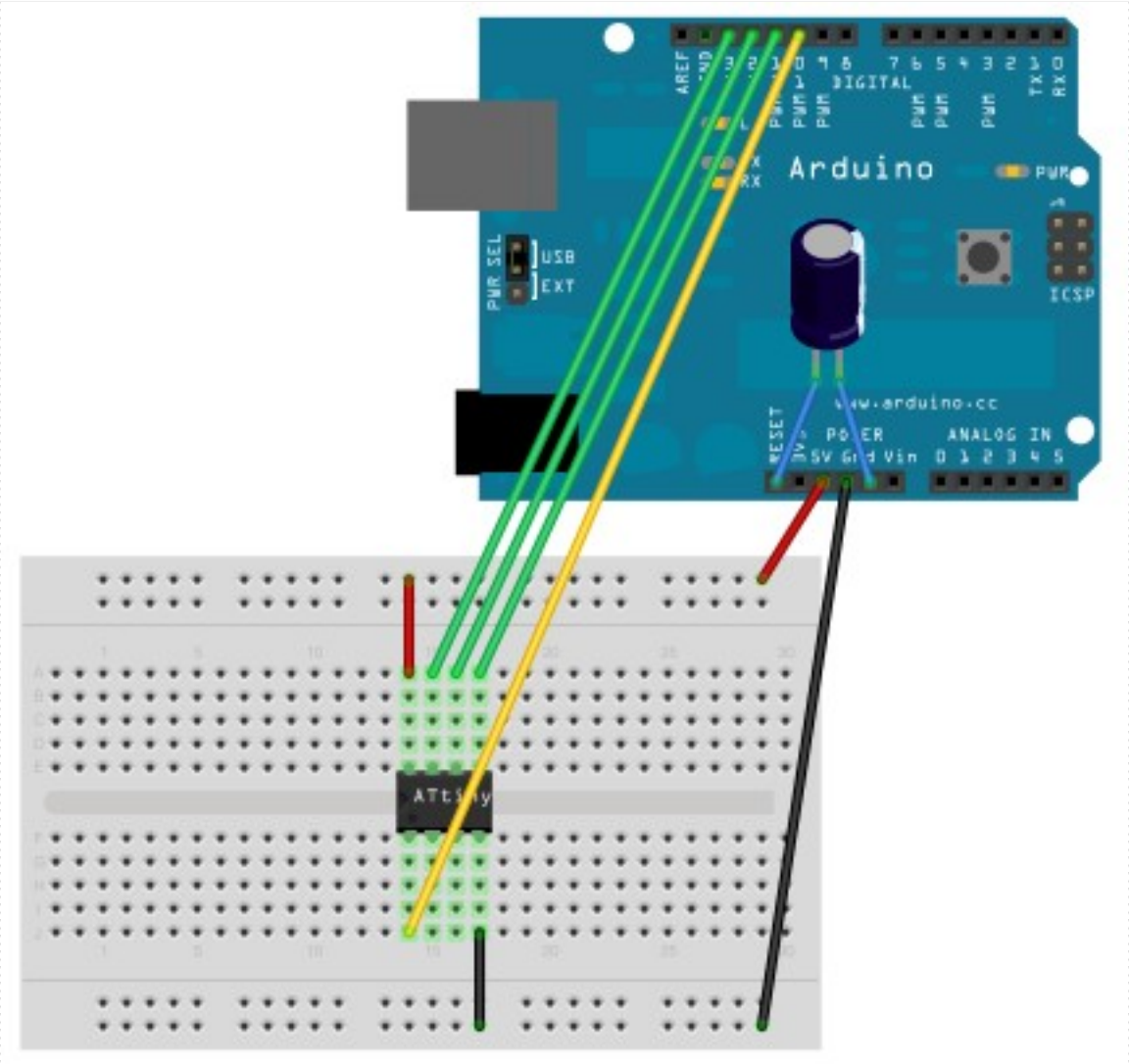
Arduino
PWR SEL
USB
EXT
ICSP
DIGITAL
ANALOG IN
www.arduino.cc

Connections

Arduino	ATtiny85	Signal
5v	Pkg 8	Vcc
Gnd	Pkg 4	Gnd
Pin 13	Pkg 7	SCLK
Pin 12	Pkg 6	MISO
Pin 11	Pkg 5	MOSI
Pin 10	Pkg 1	Reset
Pin 9		LED - heartbeat
Pin 8		LED - error
Pin 7		LED - program
Reset		10uf Cap to Gnd

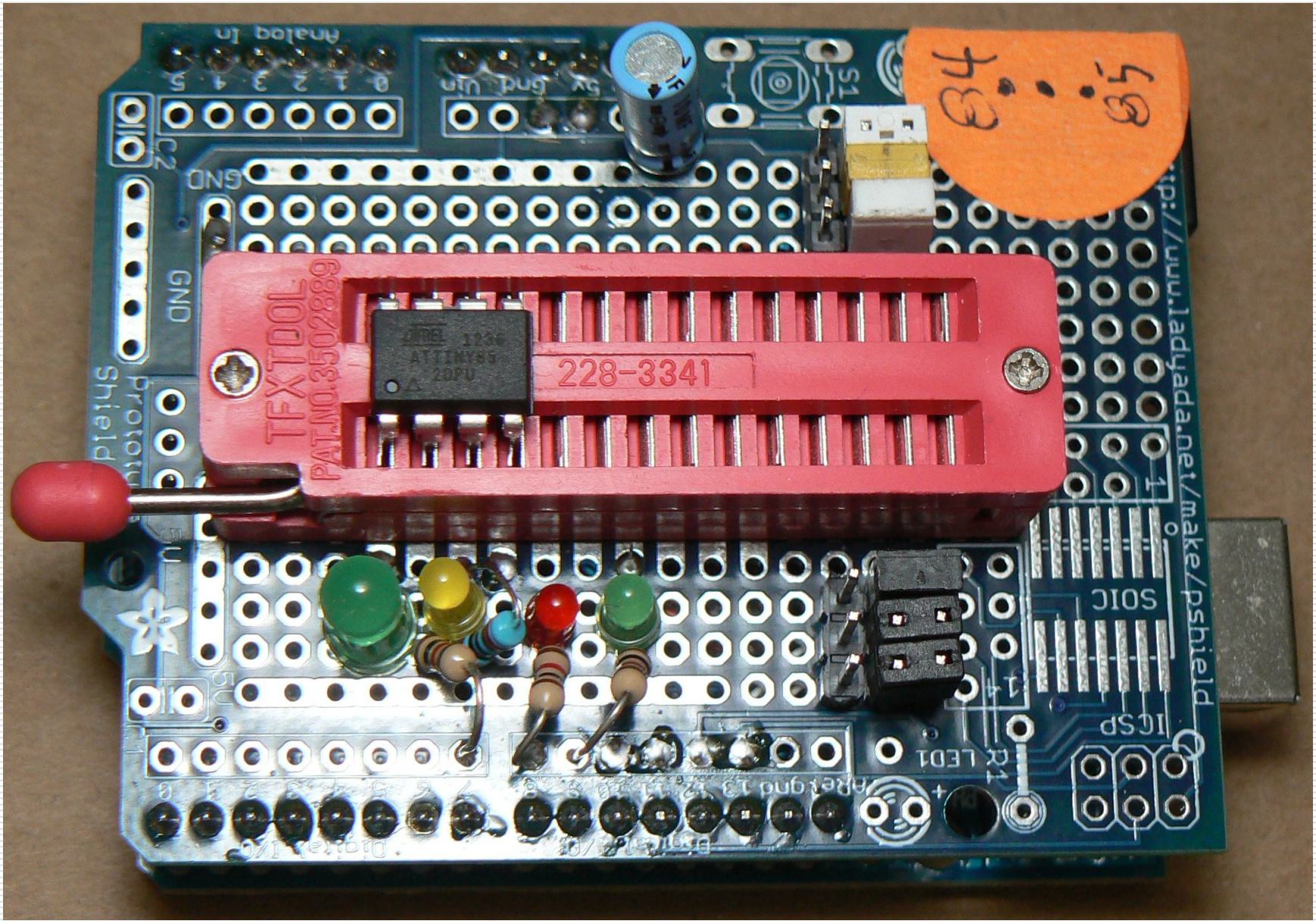
TFXTDOL
PAT.NO.3502889
228-3341
ATTINY85
20PU
Analog In
GND
Shield
SOIC
ICSP
LED1
R1
S1
C2
http://www.ladyada.net/make/pshield

Software setup

- Arduino IDE 1.0.5 (some others work)
- Need to get boards.txt and pins_arduino.h for each chip type
  - You can remove chips from boards.txt for chips you don’t expect to use
- master.zip from github
  - https://github.com/damellis/attiny
  - Contents copied to the “right place”

Step by step

- Upload ArduinoISP sketch into Arduino
- Power down
- Make connections to ATtiny chip
- Power up (ATtiny will start running)
- Select proper board via Tools/Board
  - E.g. ATtiny85 internal 1MHz clock
- Select proper programmer via Tools/Programmer/Arduino as ISP

Step by step (cont)

- Upload sketch
- Note that your program will start running as soon as the programming is finished.

Clock frequencies

- From the factory, ATtiny85 is fused for 1 MHz internal clock.
- You can change the fusing to use 8 MHz internal clock by running “Burn Bootloader”. You only need to do this once (per chip).
- You can attach an external crystal to run at up to 20 MHz. Select 20 MHz board and run “Burn Bootloader”. I think you need to hook up the crystal before programming.

Arduino library support

- pinMode()
- digitalWrite(), digitalRead()
- analogRead(), analogWrite()
- shiftOut()
- pulseIn()
- millis()
- micros()
- delay()
- delayMicroseconds()
- SoftwareSerial (has been updated in Arduino 1.0)
- Not Serial

Links

- High-Low Tech
  Arduino board as ATtiny programmer
  http://hlt.media.mit.edu/?p=1706
- HVSP fuser resetter
  http://www.simpleavr.com/avr/hvsp-fuse-resetter
- AVR Programming Methods
  http://www.avrfreaks.net/index.php?name=PNphpBB2&file=viewtopic&t=38691&start=all&postdays=0&postorder=asc

Backup Slides

Why bother?

- ↑ Cheaper
- ↑ Smaller
- ↑ No xtal or voltage regulator required
- ↓ Slower (1 or 8MHz)
- ↓ No USB
- ↓ Unplug, plug, program, unplug, plug

Digispark uses an ATtiny85

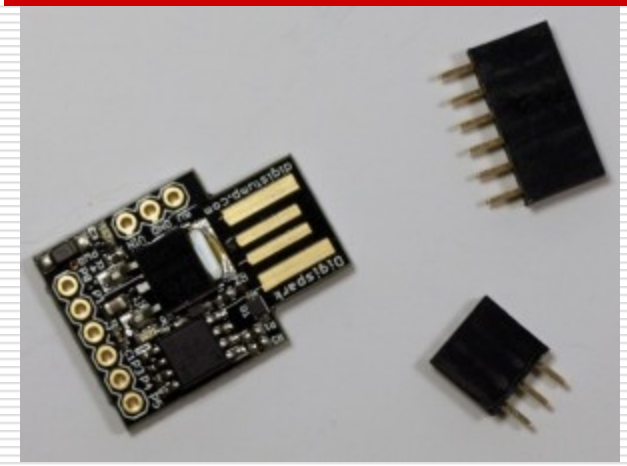

- $8.95
- 500ma 5V Regulator
- LEDs
- 2k bootloader runs USB for 5 seconds before running your code

Digispark Schematic

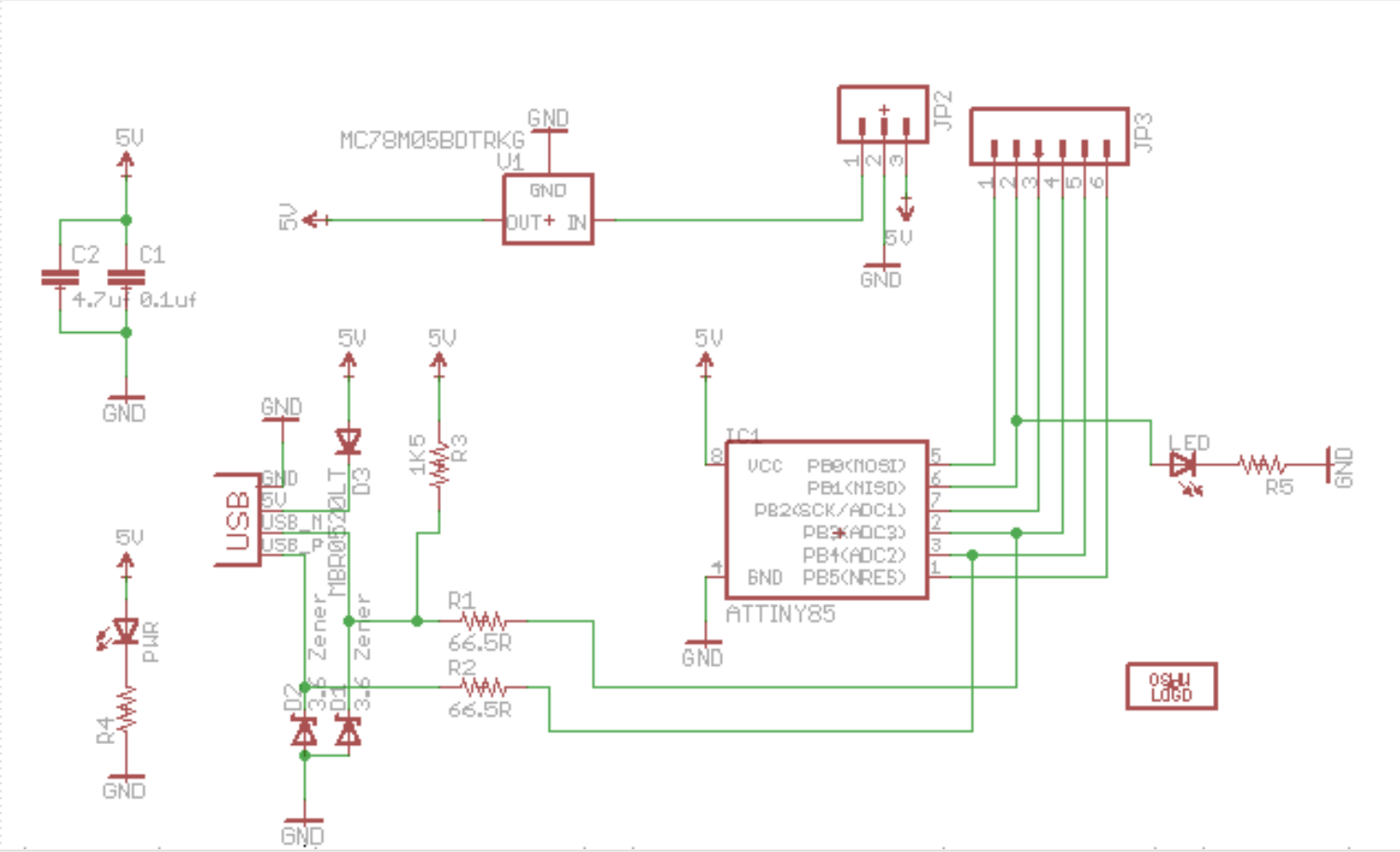

Connections

Arduino	ATtiny84	Signals
5v	Pkg 1	Vcc
Gnd	Pkg 14	Gnd
Pin 13	Pkg 9	SCLK
Pin 12	Pkg 8	MISO
Pin 11	Pkg 7	MOSI
Pin 10	Pkg 4	Reset
Pin 9		LED - heartbeat
Pin 8		LED - error
Pin 7		LED - program
Reset		10uf Cap to Gnd

Connections

Arduino	ATmega328	Signals
5v	Pkg 7	Vcc
Gnd	Pkg 8	Gnd
Pin 13	Pkg 19	SCLK
Pin 12	Pkg 18	MISO
Pin 11	Pkg 17	MOSI
Pin 10	Pkg 1	Reset
Pin 9		LED - heartbeat
Pin 8		LED - error
Pin 7		LED - program
Reset		10uf Cap to Gnd

ATtiny85 pinout

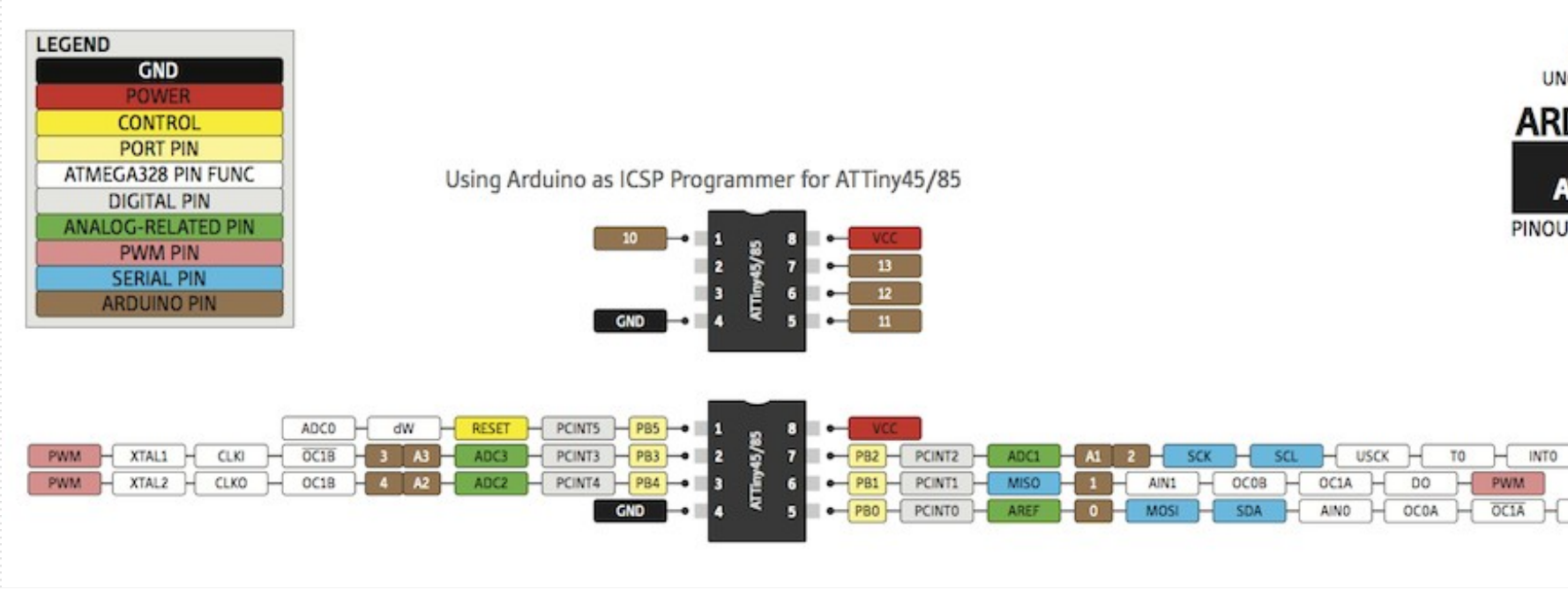

http://forum.arduino.cc/index.php/topic,146315.0.html

ATtiny84 pinout

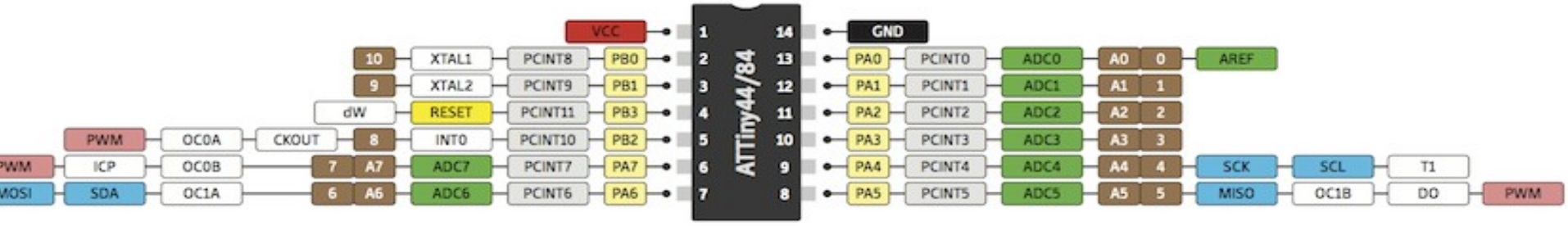

Using Arduino as ICSP Programmer for ATTiny44/84

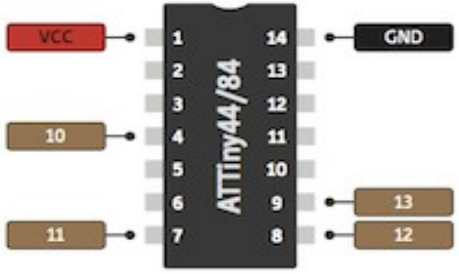

LEGEND

- GND
- POWER
- CONTROL
- PORT PIN
- ATMEGA328 PIN FUNC
- DIGITAL PIN
- ANALOG-RELATED PIN
- PWM PIN
- SERIAL PIN
- ARDUINO PIN

29 JAN 2013

http://forum.arduino.cc/index.php/topic,146315.0.html